Yang Su[1], Yali Du[2], Yansha Deng[1], and Mischa Dohler[3]

[1]Department of Engineering, King's College London
[2]Department of Informatics, King's College London
[3]Advanced Technology Group, Ericsson Inc., Silicon Valley

January 20, 2025

Posted on 20 Jan 2025 — CC-BY-NC-SA 4 — https://doi.org/10.36227/techrxiv.173739115.54193062/v1 — e-Prints posted on TechRxiv are preliminary reports that are not peer reviewed. They should not b...

Towards Communication Efficient Multi-Agent Cooperations: Reinforcement Learning and LLM

Yang Su, Yali Du, Yansha Deng and Mischa Dohler

***Abstract*—Multi-agent systems (MAS) have gained popularity due to their effectiveness in diverse applications. Among these, decentralized approaches, which rely on inter-agent communication, have emerged as a promising alternative to centralized MAS coordination methods. However, existing communication protocols often learn abstract representations that are difficult for humans to interpret. Also, the limited wireless bandwidth in real-world applications imposes a significant challenge on efficient communication among agents. To address these issues, in this paper, we consider a multi-robot navigation scenario and propose a goal-oriented human-interpretable feature communication protocol, enabling robots to transmit only the most semantically important features. Building on this protocol, we first introduce a Multi-Agent Proximal Policy Optimization (MAPPO)-based Bandwidth-Adaptive Dual-Policy (MAPPO-BDP) framework, which employs a dual-policy architecture to jointly optimize feature selection and navigation under bandwidth constraints. However, as MAPPO-BDP requires retraining for different bandwidth constraints, we further propose a Large Language Model (LLM)-based Bandwidth-Adaptive Dual-Policy (LLM-BDP) framework. By leveraging LLM-based multi-agents, LLM-BDP can adapt to varying bandwidth constraints by simply modifying the input prompt, thereby eliminating the need for retraining. Experimental results show that both MAPPO-BDP and LLM-BDP frameworks successfully complete navigation tasks within a limited number of steps by effectively communicating the most important features under bandwidth constraints. We demonstrate that LLM-BDP achieves better reasoning adaptability by utilizing more advanced LLMs and engineering example prompts. Notably, with human-interpretable feature communication protocol, robots trained with the MAPPO-BDP framework can seamlessly collaborate with robots from the LLM-BDP framework to complete tasks, even without co-training, demonstrating the practical applicability of the proposed communication protocol in new scenarios.**

***Index Terms*—Multi-agent reinforcement learning, goal-oriented semantic communication, Bandwidth constraints, Large Language Models**

I. Introduction

In recent years, Multi-agent systems (MAS) have attracted significant attention due to their remarkable effectiveness in diverse applications such as robotics, energy management, and telecommunications [1]–[4]. Centralized MAS coordination methods often suffer from vulnerabilities such as a single point of failure, scalability issues, and high communication overhead [5]. In contrast, decentralized approaches have emerged as a more promising alternative. In decentralized methods, communication among agents can be leveraged to compensate for the limitations of each agent's limited local observations. However, communication is challenged by limited wireless bandwidth in real-life applications. To jointly optimize the communication and control under the constraints of limited communication resource, two promising solutions emerge, that are: Multi-agent reinforcement learning (MARL) with communication [6] and Large Language Models (LLMs) [7].

Multi-agent reinforcement learning with communication is a subfield of reinforcement learning that focuses on the coordination and cooperation of multiple agents in a shared environment [8]. In this paradigm, agents learn to optimize their individual control policies while simultaneously learning to communicate with each other to enhance their collective performance. In such cases, the real-world communication bandwidth limitation problem has attracted increasing interest [9], [10]. In [9], variational information bottleneck technique was proposed to compress the input features to low-entropy messages to meet the bandwidth limitation requirement. The compression process utilizes a neural network, wherein the parameters are learned through extensive training. However, the compression rate needs to be chosen manually. If the compression rate is too low, the entropy of the message may exceed the bandwidth limitation. Conversely, if the compression rate is too high, the message may lose the important information, which can negatively impact the convergence of the multi-agent system.

The problem of whether to communicate or not was studied in [10]. The local observation was input into a message generation network to generate a message, and simultaneously into a Gating network to generate a communication probability. The Gating network was trained with a dataset derived from an auxiliary task, which involves calculating the difference between the Q value when communication was executed and when it was not. This difference was then compared to a threshold to produce a binary label. However, the threshold value here needs to be set manually. If the value is set low, more messages will be broadcast which may exceed the bandwidth constraints. Conversely, if the threshold is set too high, important messages may be pruned. Moreover, the messages generated in both [9] and [10] are abstract neural network embeddings, making it difficult to interpret their content in communication.

It is widely known that MARL-based MAS also faces significant challenges as traditional RL when adapting to dynamic environments, especially under different bandwidth limitations. Traditional RL approaches often require extensive

Yang Su and Yansha Deng are with the Department of Engineering, King's College London, London, WC2R 2LS, U.K. (email:{yang.2.su, yansha.deng}@kcl.ac.uk). Yali Du is with the Department of Informatics, King's College London, London, WC2R 2LS, U.K. (email:yali.du@kcl.ac.uk) (Corresponding author: Yansha Deng).

Mischa Dohler is with the Advanced Technology Group, Ericsson Inc., Silicon Valley, US. (email: mischa.dohler@ericsson.com)

retraining to accommodate new environments with optimization under new constraints, resulting in time-consuming and computationally expensive processes [11]. Moreover, these methods typically suffer from poor interpretability, making it challenging to understand and validate agents' decision-making processes. This inflexibility, limited generalization to new constraints, and lack of transparency can lead to suboptimal performance and inefficient resource utilization in real-world applications.

To address the above limitations, Large Language Models (LLMs) emerge as a promising alternative [12]. LLMs have huge amount of parameters and are trained on huge amount of training data, pre-trained LLMs are equipped with a broad spectrum of world knowledge and show emergent capabilities such as in-context learning, step-by-step reasoning, complex high-level task planning and decision making [13]–[16].

The pre-trained LLMs were utilized in [17] for both communication and motion planning in multi-robot collaboration environments. Each robot was equipped with an LLM, and the input prompt for the LLM was carefully designed to include necessary information such as the task objective, the robot's current observation, and communication instructions. In the system, each robot was required to send at least one message to other robots during the current dialog round to describe its current state and future actions. However, the approach does not explicitly consider communication constraints and assumes that all aspects of a robot's current state are equally important to other robots. This may result in the generation of lengthy and irrelevant dialogue text, leading to inefficient use of communication resources.

The vision of LLM for semantic communication between a sender and a receiver was presented in [18]. Initially, a composable diffusion model was employed to convert image data to text descriptions. Subsequently, a personalized prompt was designed to highlight the information the sender considered important. Both the text and the personalized prompt were then input into the LLM to extract semantic information that was concise and accurately reflected the sender's intentions. This extracted information was then transmitted to the receiver, who used it to reconstruct the original image. While this study demonstrated the potential of LLMs for semantic communication, it did not consider the importance of different pieces of information for the specific task or goal at hand. The LLM operated independently at the transmitter and the receiver, without taking into account which parts of the extracted information were most beneficial for the receiver to successfully reconstruct the image.

To address the limitations of previous work, goal-oriented semantic communication (GSC) has been proposed to consider the significance and usefulness of information with respect to the goal of data exchange and the application requirements [19], [20]. By adaptively prioritizing the transmission of features containing the richest goal-oriented semantic information, agents can focus on exchanging the most important and relevant information to achieve the goal of task. This selective communication strategy effectively reduces the transmission of task-unrelated features, enabling more efficient utilization of the limited bandwidth resource.

Building upon the GSC, we propose a novel Bandwidth Adaptive Dual Policy Framework (BADP) to fully utilize the limited wireless bandwidth. This framework collaboratively transmits the most important features under bandwidth constraints and generates optimized navigation actions through its two key components: a communication policy and a navigation policy. We propose two distinct approaches to realize these policies: the MARL-based approach and the LLM-based approach:

- We consider a collaborative multi-robot navigation scenario with bandwidth-constrained communication. Instead of compressing each robot's local observations into abstract neural network embedding messages, we propose a novel goal-oriented human-interpretable feature communication protocol, where only the features with the richest goal-oriented semantic communication will be transmitted, allowing humans or agents that have not been co-trained to understand the communication protocol.
- We first propose a MAPPO-based Bandwidth-Adaptive Dual-Policy (MAPPO-BDP) framework to address the challenges of selective communication under bandwidth constraints and navigation action optimization. The MAPPO-BDP employs a dual-policy architecture, combining two distinct policies: a constrained MAPPO-based feature communication policy and a MAPPO-based navigation policy.
- Given that the MAPPO-BDP framework requires retraining for different bandwidth constraints, we further introduce an LLM-based Bandwidth-Adaptive Dual policy (LLM-BDP) framework. In this framework, each robot is equipped with LLM-based multi-agents to collaborate to generate both the communication and navigation policies. By simply modifying the input prompt, the framework can adapt to varying bandwidth constraints without the need for retraining, leveraging the knowledge embedded in pretrained LLMs.
- We conduct experiments to evaluate these proposed MAPPO-BDP and LLM-BDP frameworks. Our results demonstrate that both frameworks successfully complete the navigation task in a limited number of steps. Importantly, both frameworks effectively select the most important features while adhering to bandwidth constraints. For LLM-BDP, the experiments indicate that leveraging a more powerful LLM results in higher navigation rewards, and incorporating a few example prompts enhances the reasoning capabilities of the LLM. Additionally, the experiment result shows that owing to our proposed human-interpretable feature communication protocol, robots trained with the MAPPO-BDP framework can seamlessly collaborate with robots from the LLM-BDP framework to complete tasks, even without co-training.

The rest of the papers are organized as follows. Section II presents the system model and problem formulation. Section III provides MAPPO-based Bandwidth-Adaptive Dual-Policy Framework. Section IV provides LLM-based Bandwidth-Adaptive Dual-Policy Framework. Section V illustrates the

simulation results. Finally, Section VI concludes the paper.

II. System model

As illustrated in Fig. 1, we consider a collaborative multi-agent system with bandwidth-constrained communication. This system consists of N robots that act as agents, denoted by $\mathcal{N} = \{1, \cdots, N\}$, which move within a square area with a side length of L. The 2D location of robot i is represented as $u^i \in \mathbb{R}^{2\times 1}$. The velocity of robot i is denoted as $v^i \in \mathbb{R}^{2\times 1}$. Additionally, there are M static landmarks, represented by $\mathcal{M} = \{1, \cdots, M\}$. The 2D location of landmark m is denoted as $\tilde{u}^m \in \mathbb{R}^{2\times 1}$. In this scenario, the number of landmarks equals to the number of robots, i.e., $M = N$. The goal of all robots is to navigate and reach all landmarks as soon as possible while avoiding collision with one another. In each time step t, the process is divided into two distinct phases: a communication phase T_c and a navigation phase T_n. During the communication phase T_c, each robot i generates messages based on its local observation $\vec{o}_t^i$, which includes its own position, velocity, and the positions of all landmarks. These messages are then broadcast to all other robots. During the navigation phase T_n, each robot utilizes local observation and messages received from other robots to make local navigation decisions, such as accelerating up, down, right, or left.

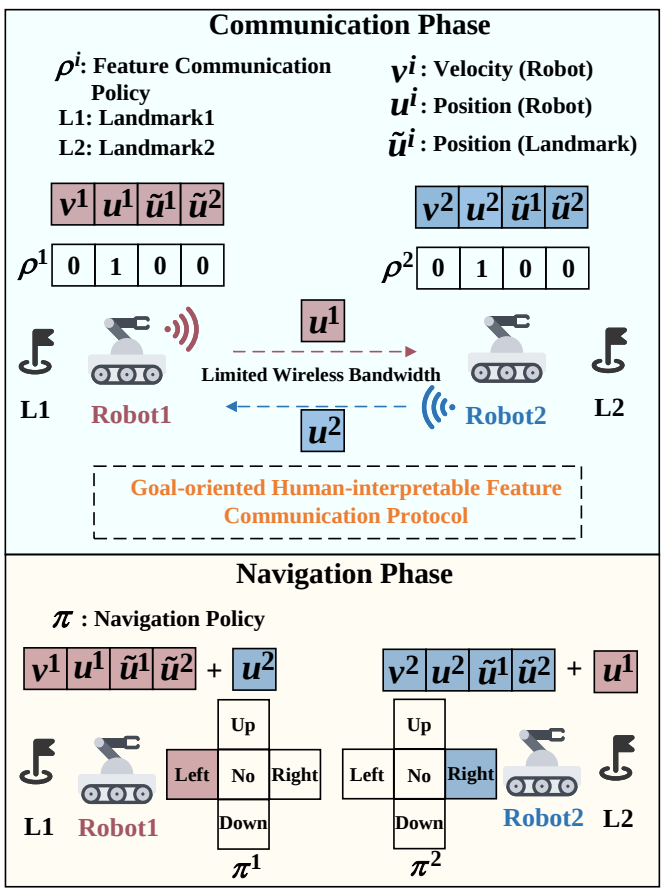

Fig. 1: Illustration of a collaborative multi-agent system with bandwidth-constrained communication.

A. Wireless Broadcast Model

We assume that there are $\tilde{C}$ orthogonal channels, denoted by $\mathcal{C} = \{1, 2, ..., \tilde{C}\}$, the bandwidth of each channel is W_c. The allocation vector of robot i is $\vec{\beta}^i = \left[\beta^{i,1}, \cdots, \beta^{i,\tilde{C}}\right]$, where $i \in \mathcal{N}$, $\beta^{i,c} \in \{0, 1\}$. $\beta^{i,c} = 1$ denotes that the cth channel is allocated to the robot i, and $\beta^{i,c} = 0$, otherwise. We assume that each channel can only be allocated to at most one robot and each robot can only occupy at most one channel such that

$$\sum_{i=1}^{N} \beta^{i,c} \leq 1, \quad \sum_{c=1}^{\tilde{C}} \beta^{i,c} \leq 1, \quad \forall c \in \mathcal{C}. \tag{1}$$

The path loss $\mathrm{L}^{i,j}$ between robot i and robot j is given by

$$\mathrm{L}^{i,j} = \mathrm{L}^0 \left(\frac{d^{i,j}}{d^0}\right)^{\alpha}, \quad j \in \mathcal{N} \setminus i, \tag{2}$$

where L^0 is the path loss at a reference distance d^0, $d^{i,j} = \|u^i - u^j\|$ is the Euclidean distance between robot i and j, d^0 is the reference distance, and α is the path loss exponent [21].

Then, the channel gain $\mathrm{H}^{i,j}$ between robot i and robot j is calculated as

$$\mathrm{H}^{i,j} = \frac{\tilde{\mathrm{P}}^{\mathrm{i}}}{\mathrm{L}^{i,j}}, \tag{3}$$

where $\tilde{\mathrm{P}}^i$ is the transmitted power from robot i.

The signal-to-noise ratio (SNR) of robot j at channel c in time slot t is given by

$$\gamma_t^{i,c,j} = \frac{\mathrm{H}^{i,j}}{\sigma^2}, \tag{4}$$

where $\mathrm{H}^{i,j}$ is the channel gain of robot i to robot j on the channel c, σ^2 is the variance of the independent zero-mean additive white Gaussian noise (AWGN).

Since the capacity of broadcast transmission is restricted by the receiver with the worst channel condition [22], let $\gamma_t^{i,c}$ denote the weakest link in time slot t, and then $\gamma_t^{i,c}$ is expressed as

$$\gamma_t^{i,c} = \min_{j \in \mathcal{N} \setminus i} \gamma_t^{i,c,j}. \tag{5}$$

The transmission rate of robot i for each receiver in tth time slot on the channel c is given by [23]

$$R_t^{i,\mathrm{tx}} = W_c \log_2 \left(1 + \tilde{P}^i \gamma_t^{i,c}\right), \tag{6}$$

where $\tilde{P}^i$ is transmit power of robot i.

The maximum number of bits that can be transmitted by robot i during the communication phase T_c is given by

$$\mathrm{B}_t^i = R_t^{i,\mathrm{tx}} \times T_c. \tag{7}$$

B. Goal-oriented Human-interpretable Feature Communication

Rather than compressing local observation $\vec{o}_t^i$ into non-interpretable messages (e.g., abstract neural network embeddings), which are not understandable to humans or other agents not co-trained together, we introduce a novel selective feature communication mechanism that allows robots to broadcast only the most important features, which is the

semantic information, thereby enhancing the generalization of communication protocol.

The local observation $\vec{o}_t^i$ of ith robot consists of multiple observation components, also known as features, including its own velocity v_t^i, position u_t^i, and all landmarks' positions $\{\tilde{u}_t^1, \tilde{u}_t^2, \ldots, \tilde{u}_t^m\}$, where $m \in \mathcal{M}$. Thus, the local observation $\vec{o}_t^i$ could be represented as

$$\vec{o}_t^i = [v_t^i, u_t^i, \tilde{u}_t^1, \tilde{u}_t^2, \ldots, \tilde{u}_t^m], \quad i \in \mathcal{N},\ m \in \mathcal{M}. \tag{8}$$

For any ith robot, we use $\mathcal{K} = \{1, \cdots, k\}$ to index the full set of features in (8) available for selection. In this study, each robot i generates a feature selection vector $\vec{g}_t^i = [g_t^{i,1}, \ldots, g_t^{i,k}]$, where each element $g_t^{i,k} \in \{0, 1\}$. Specifically, $g_t^{i,k} = 1$ indicates that the kth feature is selected for communication, while $g_t^{i,k} = 0$ indicates that the feature is not selected. This vector is determined based on the feature communication strategy ρ^i. Then the selected features are encapsulated into a message $\vec{m}_t^i$, which is represented as

$$\vec{m}_t^i = \left[\vec{o}_t^{i,j} \mid j \in \mathcal{K}_t^i\right], \tag{9}$$

where $\mathcal{K}_t^i = \{j \in \mathcal{K} \mid g_t^{i,j} = 1\}$ represents the set of feature indices selected by robot i at time step t.

Due to the limited communication bandwidth for each robot, it is crucial to carefully select which features to transmit to ensure that the most important feature is conveyed within the available bandwidth. We utilize the function $S(.)$ to calculate the size of each feature. The size of $\vec{m}_t^i$ is given by

$$S(\vec{m}_t^i) = \sum_{j \in \mathcal{K}_t^i} S(\vec{o}_t^{i,j}). \tag{10}$$

The size of the message must satisfy the bandwidth constraints,

$$S(\vec{m}_t^i) \leq \mathrm{B}_t^i, \quad i \in \mathcal{N}. \tag{11}$$

After broadcasting these messages, each robot receives information from its peers. The received messages for robot i at time slot t are concatenated to obtain the final received message, which is described as

$$\vec{m}_t^{i,\mathrm{rev}} = \left[\vec{m}_t^j \mid j \neq i, j \in \mathcal{N}\right]. \tag{12}$$

C. Robot Motion Model

Upon receiving messages, each robot i constructs an updated observation by concatenating its local observation with the received message. The resulting updated observation is denoted as $\hat{o}_t^i$, and is given by:

$$\hat{o}_t^i = \left[\vec{o}_t^i, \vec{m}_t^{i,\mathrm{rev}}\right], \quad i \in \mathcal{N}. \tag{13}$$

Here, $\hat{o}_t^i$ comprises both the robot's local observation and selectively shared features from other robots.

Next, robot i generates its movement action a^i based on $\hat{o}_t^i$ and its navigation policy π^i. The available actions include accelerating in different directions (up, down, left, or right) or with no acceleration. Each action directly affects the robot's acceleration $\mathbf{a}^i$ according to the following function [24]:

$$\mathbf{a}^i = \begin{cases} [-e, 0] & \text{if accelerate left} \\ [e, 0] & \text{if accelerate right} \\ [0, -e] & \text{if accelerate down} \\ [0, e] & \text{if accelerate up} \\ [0, 0] & \text{if no acceleration} \end{cases}, \tag{14}$$

where e is a positive constant that represents the magnitude of the robot's acceleration for each directional movement.

Subsequently, the velocity of each robot is updated by applying a damping factor α to simulate friction or air resistance, using

$$v_{t+1}^i = v_t^i \times (1 - \alpha) + \mathbf{a}^i \times T_n. \tag{15}$$

If the velocity v_{t+1}^i exceeds a predefined maximum speed $v_{\max}$, it is capped to ensure stability:

$$v_{t+1}^i = \frac{v_{t+1}^i}{\|v_{t+1}^i\|} \times v_{\max}, \tag{16}$$

where $||.||$ denotes the Euclidean norm.

Finally, the position is updated based on the new velocity:

$$u_{t+1}^i = u_t^i + v_{t+1}^i \times T_n. \tag{17}$$

Our model also considers collisions, which can be identified when the distance between any two robots is less than a predefined minimum safe distance $d_{\min}$.

D. Problem Formulation

In this paper, all robots aim to navigate and cover all landmarks as soon as possible while avoiding collisions. Meanwhile, the size of messages broadcast by robots is restricted by limited bandwidth. To quantify the efficiency of landmark coverage, we first define C_t as

$$C_t = \sum_{m=1}^{M} \min_{i \in \mathcal{N}} ||u_t^i - \tilde{u}^m||, \tag{18}$$

where u_t^i denotes the position of robot i at time t, and $\tilde{u}^m$ represents the position of static landmark m, $||.||$ denotes the Euclidean norm. This term sums the distances between each landmark and its closest robot.

To account for collision likelihood, we define P_t as

$$P_t = \sum_{i=1}^{N} \sum_{k=i+1}^{N} \mathbb{I}(||u_t^i - u_t^k|| < d_{\min}), \tag{19}$$

where $d_{\min}$ is the minimum safe distance between any two robots. The indicator function $\mathbb{I}(\phi)$ equals 1 if ϕ is true and 0 otherwise. Thus, $\mathbb{I}(|u_t^i - u_t^k| < d_{\min})$ returns 1 when robots i and k are closer than $d_{\min}$, indicating a potential collision.

To balance the trade-off between landmark coverage and collision avoidance, we introduce the weight parameter η. A larger value of η prioritizes avoiding potential collisions, while

a smaller η prioritizes faster landmark coverage. The problem can be formulated as

$$\begin{aligned} \min_{\boldsymbol{\rho},\boldsymbol{\pi}} \quad & \mathbb{E}_{\boldsymbol{\rho},\boldsymbol{\pi}}\left[\sum_{t=0}^{\infty}\gamma^t\left(C_t+\eta P_t\right)\right], \\ \text{s.t.} \quad & S(\vec{m}_t^i)\le \mathrm{B}_t^i, \quad i\in\mathcal{N} \end{aligned} \tag{20}$$

where γ is the discount factor, C_t is given in (18), P_t is given in (19), the feature communication policy $\boldsymbol{\rho}=[\rho^1,\rho^2,\ldots,\rho^N]$ and the navigation policy $\boldsymbol{\pi}=[\pi^1,\pi^2,\ldots,\pi^N]$.

III. MAPPO-based Bandwidth-Adaptive Dual-Policy Framework

In this section, we introduce a MAPPO-BDP Framework to address the optimization problem in (20), as illustrated in Fig. 2. We first decompose the overall objective into two components: a communication objective and a navigation objective, respectively. We then propose a constrained MAPPO algorithm to tackle the communication objective and a standard MAPPO algorithm for the navigation objective, ensuring efficient coordination across agents [25], [26].

A. Alternating Dual-Policy Optimization

Algorithm 1 Alternating Dual-Policy Optimization

Require: Initialize all agents' communication actor network ϕ^i, shared communication critic network φ, and all agents' navigation actor networ θ^i, shared navigation critic network ϑ.

```
Initialize λ^i and set learning rate α_λ
while not at Max Episodes do
    Episode Tracjectory Sampling
    if Communicaiton Policy Optimization then
        Optimize φ by minimizing L(φ) in (29)
        Optimize φ^i by maximizing L(φ^i) in (30)
        Update λ^i based on (28)
    else if Action Policy Optimization then
        Optimize ϑ by minimizing L(ϑ) in (35)
        Optimize θ^i by maximizing L(θ^i) in (36)
    end if
    Switch Optimization Phase
end while
```

The framework employs an alternating dual-policy optimization approach, where one policy is held fixed while the other is optimized iteratively, as illustrated in **Algorithm** 1. This method allows for independent refinement of both feature communication and navigation strategies, enhancing system flexibility and adaptability.

a) Feature Communication Policy $\boldsymbol{\rho}$: we begin by fixing the navigation policy $\boldsymbol{\pi}$ and updating the feature communication policy $\boldsymbol{\rho}$. Given the constraints imposed by wireless communication bandwidth, the optimization problem for the feature communication policy is formulated as

$$\begin{aligned} \max_{\boldsymbol{\rho}} \quad & -\mathbb{E}_{\boldsymbol{\rho},\boldsymbol{\pi}}\left[\sum_{t=0}^{\infty}\gamma^t\left(C_t+\eta P_t\right)\right] \quad , \\ \text{s.t.} \quad & S(\vec{m}_t^i)\le \mathrm{B}_t^i, \quad i\in\mathcal{N} \end{aligned} \tag{21}$$

This formulation represents a constrained Markov Decision Process (C-MDP) [27], which can be transformed into the following unconstrained form using the Lagrangian primal-dual policy optimization technique:

$$\min_{\lambda^i\ge 0}\max_{\boldsymbol{\rho}}\left[-\mathbb{E}_{\boldsymbol{\rho},\boldsymbol{\pi}}\sum_{l=0}^{\infty}\gamma^t\left(C_t+\eta P_t\right)-\sum_{i=1}^{n}\lambda^i\cdot\left(\mathrm{B}_t^i-S(\vec{m}_t^i)\right)\right], \tag{22}$$

where λ^i denotes the Lagrange multiplier of agent i.

b) Navigation Policy $\boldsymbol{\pi}$: With fixed feature communication policy $\boldsymbol{\rho}$, we then focus on optimizing the navigation policy $\boldsymbol{\pi}$. The optimization objective for $\boldsymbol{\pi}$ is given by

$$\max_{\boldsymbol{\pi}} \ -\mathbb{E}_{\boldsymbol{\rho},\boldsymbol{\pi}}\left[\sum_{l=0}^{\infty}\gamma^t\left(C_t+\eta P_t\right)\right]. \tag{23}$$

B. Constrained MAPPO-based Feature Communication Policy

To address the updated problem in (22), we propose a feature selection algorithm based on constrained MAPPO. As shown in Fig. 2, each agent is equipped with an actor network that determines the transmission probabilities for each feature. Additionally, during the training phase, a shared critic network is employed across all agents to estimate the value function, which serves to evaluate expected future rewards and guides the parameter updates of the actor network.

Communication Observation: During the communication phase, each agent i receives an observation $\vec{o}_t^i$, which includes the agent's position, velocity, and relevant positions of landmarks. This observation $\vec{o}_t^i$ serves as the input to the agent's actor network. The global communication state s_t is formed by combining observations of all agents, denoted as

$$s_t=[\vec{o}_t^1,\vec{o}_t^2,\ldots,\vec{o}_t^N], \tag{24}$$

where $\vec{o}_t^i$ is given in (8), N represents the total number of robots.

Communication Action: As the number of features grows, the potential combinations of selected features increase exponentially, leading to an expanded action space. To manage this complexity, we structure the action space into k groups, each representing a binary choice for a feature (to transmit or not). Instead of generating a probability for each of the 2^k possible feature combinations, we independently generate a probability for each binary choice per feature. This grouping approach allows the model parameters to scale linearly with the number of features, effectively avoiding the issue of combinatorial explosion. For each feature k, we define the communication action as follows:

$$a^{\mathrm{com},k}=\left[\text{Transmit } k\text{th feature}, \text{Not Transmit } k\text{th feature}\right]. \tag{25}$$

The complete communication action across all features is then given by:

$$a^{\mathrm{com}}=\left[a^{\mathrm{com},1},\ldots,a^{\mathrm{com},k}\right], \tag{26}$$

where $a^{\mathrm{com},k}$ is given in (25).

Communicaiton Reward: To account for communication costs, we define a penalized reward function:

$$r_t^{\mathrm{com}}=-(C_t+\eta P_t)-\lambda^i S(\vec{m}_t^i), \tag{27}$$

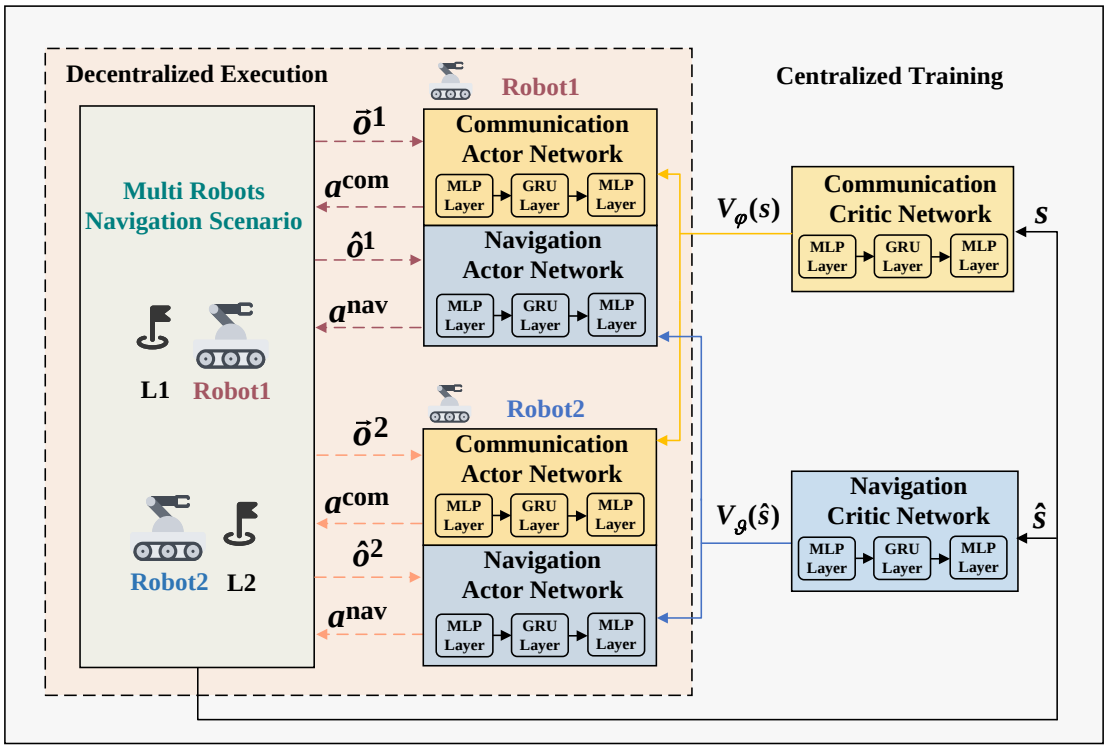

Fig. 2: The MAPPO-based Bandwidth-Adaptive Dual-Policy Framework.

where C_t measures landmark coverage efficiency, as defined in (18), while P_t counts the number of potential collisions, as defined in (19). λ^i is a penalty coefficient that adjusts the impact of communication costs on the reward. Additionally, $S(\vec{m}_t^i)$ denotes the size of message $\vec{m}_t^i$, as defined in (11) . This design encourages agents to select the most important features that enhance landmark coverage efficiency and minimize agent collisions while adhering to bandwidth constraints.

The Lagrange Multiplier λ^i is dynamically updated using

$$\lambda^i \leftarrow \Gamma_\lambda \left[\lambda^i + \alpha_\lambda \left(S(\vec{m}_t^i) - B_t^i\right)\right], \tag{28}$$

where Γ_λ projects λ^i onto the range $[0, \lambda_{\max}]$, and α_λ represents the learning rate.

Communication Critic Network: The communication critic network, parameterized by φ, estimates the value of the global state, thereby assisting in guiding the parameter updates of the actor network. The critic network aims to minimize the following loss function

$$L(\varphi) = \mathbb{E}\left[\left(V_\varphi(s_t) - \hat{R}_t^{\text{com}}\right)^2\right], \tag{29}$$

where $\hat{R}_t^{\text{com}}$ denotes the discounted return, given by $\hat{R}_t^{\text{com}} = \sum_{l=0}^{\infty} \gamma^l r_{t+l}^{\text{com}}$. The term r_t^{com} is defined in (27).

Communication Actor network: The communication actor network for each agent i is denoted as ρ^i with parameters ϕ^i. The network takes o^i as input and outputs the probability of each action in a^{com}. The actor network is optimized by maximizing the following objective function:

$$L(\phi^i) = \mathbb{E}\left[\min\left(r_\phi^i A_t^i, \text{clip}\left(r_\phi^i, 1-\epsilon, 1+\epsilon\right) A_t^i\right) + \sigma H\left(\rho^i\right)\right], \tag{30}$$

where $r_\phi^i = \rho^i / \rho_{\text{old}}^i$ represents the probability ratio of selecting a communication action a^{com} under the current communication policy compared to the old communication policy. The clip function restricts the probability ratio r_ϕ^i to the interval $[1-\epsilon, 1+\epsilon]$, where ϵ is a positive hyperparameter. This clipping mechanism ensures that the communication policy does not change too drastically, thereby maintaining stable training progress. The σ is the entropy coefficient, which balances the contribution of policy entropy $H[\rho^i]$ to encourage the exploration of different communication strategies. The advantage function A_t^i, which evaluates the relative benefit of actions compared to the average and guides the communication policy update, is calculated using the Generalized Advantage Estimation (GAE) [28] method

$$A_t^i = \sum_{k=0}^{T-t-1} (\gamma\xi)^k \delta_{t+k}, \tag{31}$$

where $\delta_t = r_t^{\text{com}} + \gamma V_\varphi(s_{t+1}) - V_\varphi(s_t)$ defines the temporal difference error used in the GAE calculation, ξ is a hyperparameter that controls the trade-off between bias and variance in the advantage estimation. T denotes the length of the trajectory.

C. MAPPO-based Navigation Policy

To address the problem in (23), we propose a navigation algorithm based on MAPPO [26], as illustrated in Fig. 2. Each agent is equipped with a navigation actor network, while a shared navigation critic work is employed for state value estimation.

Navigation Observation: During the navigation phase, the observation for agent i is $\hat{o}_t^i$ and introduced in (13), includes

both the local observation of agent i and the messages received from other agents. The global navigation state $\hat{s}_t$ is the aggregation of the navigation observations from all agents, expressed as

$$\hat{s}_t = [\hat{o}_t^1, \hat{o}_t^2, \ldots, \hat{o}_t^N]. \tag{32}$$

Navigation Action: For each agent, the action space for navigation policy includes accelerating in the directions of up, down, left, or right, as well as the option of no acceleration, which is denoted as

$$a^{\text{nav}} = [\text{up, down, left, right, no acceleration}]. \tag{33}$$

Navigation Reward: The reward for the navigation policy is defined as

$$r_t^{\text{nav}} = -(C_t + \eta P_t), \tag{34}$$

where C_t measures landmark coverage efficiency, as defined in (18), while P_t counts the number of potential collisions, as defined in (19). The reward structure is designed to emphasize both landmark coverage efficiency and collision avoidance.

Navigation Critic Network: The navigation critic network is optimized by minimizing its loss function, which is defined as

$$L(\vartheta) = \mathbb{E}\left[\left(V_\vartheta(\hat{s}_t) - \hat{R}_t^{\text{nav}}\right)^2\right], \tag{35}$$

where $\hat{R}_t^{\text{nav}}$ represents the discounted return, calculated as $\hat{R}_t^{\text{nav}} = \sum_{l=0}^{\infty} \gamma^l r_{t+l}^{\text{nav}}$. The term r_{t+l}^{nav} is given in (34).

Navigation Actor Network: The navigation actor network for each agent i is represented as π^i with parameters θ^i. The training objective of the navigation actor network is to maximize the function

$$L(\theta^i) = \mathbb{E}\left[\min\left(r_\theta^i \hat{A}^i, \text{clip}\left(r_\theta^i, 1-\epsilon, 1+\epsilon\right)\hat{A}^i\right) + \sigma H\left[\pi^i\right]\right], \tag{36}$$

where $r_\theta^i = \pi^i / \pi_{\text{old}}^i$ denotes the probability ratio of selecting a navigation action a^{nav} under the current navigation policy compared to the old navigation policy. Additionally, $H\left[\pi^i\right]$ represents the entropy of the navigation policy. The advantage function $\hat{A}$, is calculated using the GAE method:

$$\hat{A}_t^i = \sum_{k=0}^{T-t-1} (\gamma\xi)^k \hat{\delta}_{t+k}, \tag{37}$$

where $\hat{\delta}_t = r_t^{\text{nav}} + \gamma V_\vartheta(\hat{s}_{t+1}) - V_\vartheta(\hat{s}_t)$ defines the temporal difference error used in the GAE calculation.

D. Neural Network Architecture

Our neural network architecture for both the actor and critic networks in feature communication policy and navigation policy consists of three key components: an input multilayer perception (MLP), a gated recurrent unit (GRU), and an output MLP. Initially, the actor networks employ the input MLP processes observation or updated observation information into compact representations through two fully connected layers with Tanh activations. The GRU layer captures temporal dependencies by updating its hidden state at each time step, thereby enhancing decision-making by maintaining relevant information over time. Subsequently, the output MLP maps the GRU's output to action spaces, applying a softmax activation to generate probability distributions over actions. The critic networks utilize a similar structure, with the input MLP processing state information and the output MLP estimating the state value.

IV. LLM-BASED BANDWIDTH-ADAPTIVE DUAL-POLICY FRAMEWORK

Our previously proposed MAPPO-BDP framework effectively navigates robots to reach landmarks while maintaining communication under constant bandwidth constraints. However, when the bandwidth constraint changes, the MAPPO-BDP framework requires retraining, which is both time-consuming and energy-intensive. To address these issues, we propose an LLM-based Bandwidth-Adaptive Dual policy framework (LLM-BDP), as illustrated in Fig. 3 on the next page. In the communication phase, we design two LLM-based agents for each robot: the Feature Ranking Agent and the Bandwidth Adaptive Agent. These agents work together to determine which features to broadcast. Notably, when the bandwidth constraint changes, we can simply adjust the prompt input in the Bandwidth Adaptive Agent to meet the updated constraint, eliminating the need for retraining. In the navigation phase, we introduce two additional LLM-based agents: the Navigation Agent and the Collision Avoidance Agent. These agents collaborate to select appropriate navigation actions, ensuring effective movement while minimizing collision risks.

A. Objective Decomposition

The overall objective of our system can be divided into two main components: communication and navigation. Each component has specific goals that are addressed by different agents within the framework.

For the communication objective, the goal is to efficiently transmit the most important features within the given bandwidth constraints. This is achieved by two LLM-based agents: the Feature Ranking Agent and the Bandwidth Adaptive Agent. The Feature Ranking Agent evaluates and prioritizes the observed features based on their importance for assisting other robots in achieving their navigation goals and enhancing coordination. The Bandwidth Adaptive Agent then determines how many number of these prioritized features can be transmitted under the current bandwidth conditions.

On the other hand, the navigation objective focuses on reaching the target landmark as quickly as possible while avoiding collisions. This is managed by the Navigation Agent and the Collision Avoidance Agent. The Navigation Agent identifies the optimal target landmark and generates a set of potential navigation actions to reach it. The Collision Avoidance Agent then assesses these actions for collision risks and selects the safest action to minimize collision risks.

B. LLM-based Agents

As shown in Fig. 3, the LLM-BDP framework leverages specialized LLM-based agents [29] to address the decomposed

Fig. 3: The LLM-based Bandwidth-Adaptive Dual-Policy Framework.

sub-objectives effectively. Each LLM-based agent incorporates the following components:

- **Task Specification**: Each agent is assigned a detailed natural language description of its task, derived from the corresponding sub-objective. For example, the feature-ranking agent receives the following task description: "You are a feature-ranking agent. Your role is to analyze the observed features and assess their importance to other robots."
- **Input Format**: The input information is transformed into a natural language format to align with the LLM's capabilities. For instance, for the feature-ranking agent, the robot's local observation $\vec{o}_t^i$, defined in (8), is converted into a structured description, such as "At time step t, the robot i observes its velocity v_t^i, position u_t^i, and the position of landmark1 $\tilde{u}_t^1$ and landmark2 $\tilde{u}_t^2$".
- **Output Expectations**: Each agent generates outputs tailored to its sub-objective. For example, the feature-ranking agent first outputs a reasoning process to evaluate the importance of each feature, followed by a ranked list of features. Including the reasoning process helps reduce hallucination and enhances the reliability of the LLM

agent.

- **Contextual Memory**: To improve adaptability and learning, agents incorporate a contextual memory mechanism. This mechanism stores past observations and actions, enabling the agent to refine decisions over time and improve coordination with other agents.
- **Few-shot Learning Examples**: Each agent is initialized with few-shot examples, which demonstrate reasoning steps and the process of deriving final results. These examples guide the LLM-based agents to achieve accurate and consistent outputs.

These components enable the LLM-based agents to address their respective sub-objectives effectively.

C. Communication Phase

During the communication phase, each robot is equipped with two LLM-based agents that cooperate to select the most important features for broadcasting, while ensuring the size of the transmitted features adheres to the bandwidth constraint.

1) Feature Ranking Agent: The Feature Ranking Agent is responsible for evaluating and ranking observed features based on their importance to other robots. It processes the natural language-formatted observation $\vec{o}_t^i$ as input. Leveraging a pre-trained LLM, the Feature Ranking Agent assesses the importance of each feature and outputs a ranked list of features alongside a reasoning process. Features with higher rankings are thought more important for aiding other robots in achieving navigation goals and enhancing overall coordination.

2) Bandwidth Adaptive Agent: The Bandwidth Adaptive Agent determines a subset of ranked features that can be transmitted within the current bandwidth constraints. Using the ranked list of features provided by the Feature Ranking Agent and the current bandwidth capacity, it identifies the maximum number of features that can be transmitted while adhering to these limitations. The selected subset of features ensures efficient communication without exceeding the available bandwidth.

The prompt for Feature Ranking Agent and Bandwidth Adaptive Agent is shown in the upper part of Fig. 3.

D. Navigation Phase

During the navigation phase, each robot is equipped with two LLM-based agents that collaborate to generate the navigation actions. These actions aim to guide the robot to cover landmarks as quick as possible while minimizing the risk of collisions with other robots.

1) Navigation Agent: The Navigation Agent is responsible for selecting a target landmark and generating potential navigation actions to approach it. It processes an updated observation $\hat{o}_t^i$ in natural language format as input. Utilizing a pre-trained LLM, the Navigation Agent produces a list of candidate actions that align with the robot's objectives.

2) Collision Avoidance Agent: The Collision Avoidance Agent evaluates the candidate navigation actions proposed by the Navigation Agent and selects the one with the lowest collision risk. It performs this analysis based on the updated observation, carefully considering the relative positions and predicted trajectories of nearby robots. By prioritizing safety while maintaining progress toward mission objectives, the Collision Avoidance Agent ensures effective and collision-free navigation.

The prompt for Navigation Agent and Collision Avoidance Agent is shown in the lower part of Fig. 3.

V. Simulation Results

In this section, we evaluate the performance of our proposed MAPPO-BDP and LLM-BDP frameworks. In our experiments, we consider three robots and three landmarks. At the beginning of each episode, the positions of agents and landmarks are randomly initialized. Each episode has 25 time steps. Each agent has five communication features available for selection, with each feature occupying 16 bytes. We explore different bandwidth constraints W_c, which determine the number of features that can be transmitted. The detailed simulation parameters and MAPPO-BDP learning hyper-parameters are presented in Tables I and II, respectively.

TABLE I: Simulation Parameters

Parameter	**Value**	**Parameter**	**Value**
Path Loss Ref. L_0	1.0	Reference Distance d_0	1.0 m
Path Loss Exponent α	2.0	Noise Variance σ^2	-60 dBm
Transmit Power $\tilde{P}^i$	0.1 W	Number of Agents	3
Commu. Phase T_c	0.01 s	Navigation. Phase	10 s
Damping Factor α	0.25	Maximum Speed $v_{\max}$	1 m/s
Acc. Magnitude e	5 m/s^2	Side Length L	200 m
Safe Distance $d_{\min}$	10 m	Weight Parameter η	1

TABLE II: Learning Hyperparameters

Total Episodes	3000	Hidden Layer Size	64
Learning Rate α_λ	0.001	Discount Factor γ	0.99
Clip Range ϵ	0.2	GAE ξ	0.95
Entropy Coefficient σ	0.01	Value Loss Coefficient	1
Batch Size	3200	Epochs per Update	10
Optimizer	Adam	Activation Function	Tanh

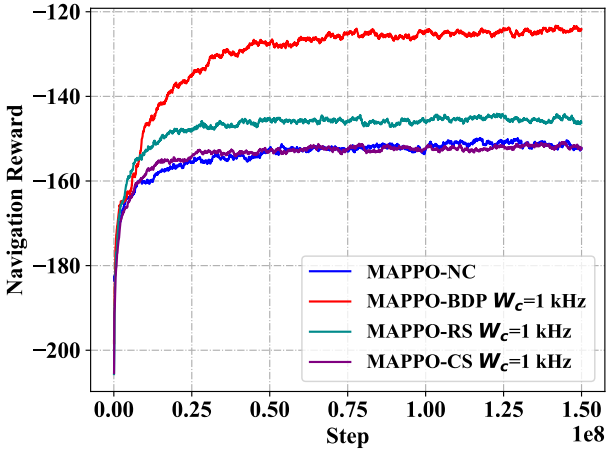

Fig. 4: Navigation Reward Comparison.

Fig. 4 plots the navigation reward over training steps. Our MAPPO-BDP framework with W_c = 1 kHz, demonstrates

best reward convergence. We compared it with three other algorithms: (1) MAPPO-based navigation policy with no communication (MAPPO-NC); (2) MAPPO-based navigation policy with random communication feature selection (MAPPO-RS), where only one feature is selected each time step to meet the W_c = 1 kHz constraint; (3) MAPPO with cyclical communication feature selection (MAPPO-CS), where the agent cyclically transmits one feature per time step, following the order from one to five, and then repeats the cycle. The results indicate that our MAPPO-BDP method achieves the highest convergence navigation reward.

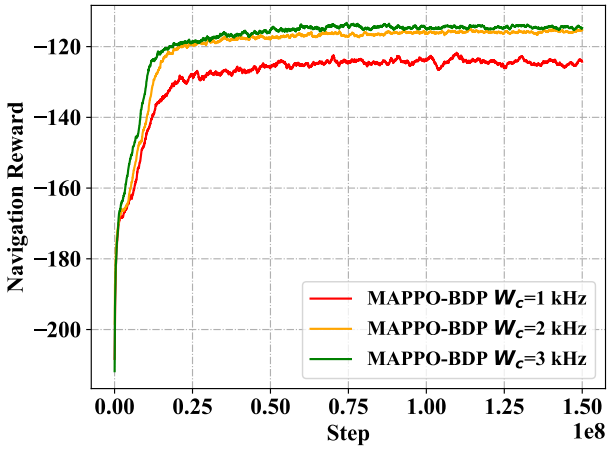

(a)

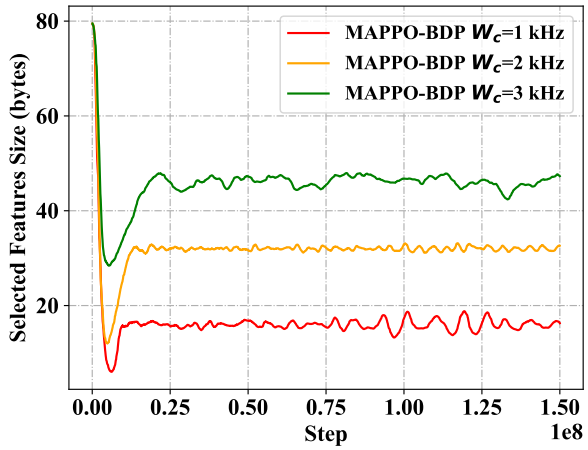

(b)

Fig. 5: (a) MAPPO-BDP with Different Bandwidth Constraints. (b) The Size of Selected Communication Features.

Fig. 5 (a) plots the navigation reward over training steps for our MAPPO-BDP framework under different bandwidth constraints. As the bandwidth W_c increases from 1 kHz to 2 kHz, the final convergence navigation reward also increases. However, when the W_c increases from 2 kHz to 3 kHz, there is no corresponding increase in the final convergence navigation reward. This indicates that W_c = 2 kHz is sufficient for transmitting the most important features. Fig. 5 (b) plots the average size of selected features for each robot in our MADP framework. Initially, the average size of selected features exceeds the bandwidth constraints, but as the training progresses, the average size of selected features gradually adjusts to meet the different bandwidth constraints.

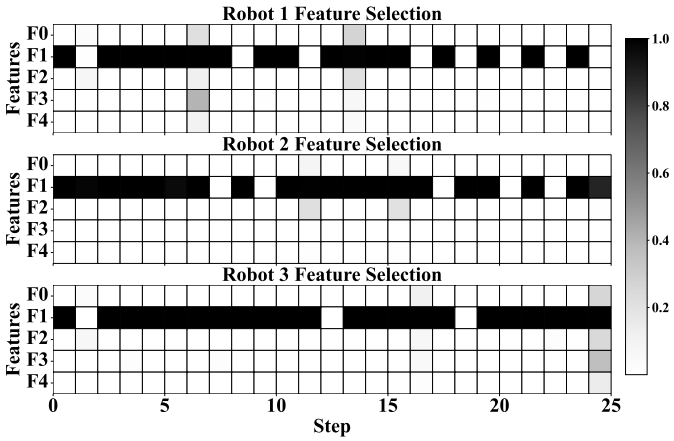

Fig. 6: Feature Selection Probabiltiy of MAPPO-BDP.

Fig. 6 presents the feature selection probability of each robot at each time step within an episode, utilizing our proposed MAPPO-BDP with W_c = 1 kHz. In the figure, F0 represents the robot's velocity feature, F1 denotes the robot's position feature, and F2, F3, and F4 represent the position feature of landmark 1, 2, and 3, respectively. During the whole episode, it is evident that all agents consistently exhibit a higher likelihood of selecting F1 for transmission. This aligns with intuitive expectations, as sharing their own location is critical for enhanced collaborative performance, given that other agents do not have this information inherently.

For LLM-BDP framework, we evaluate the performance using either gpt-4o-mini or gpt-4o [30], [31] as the underlying LLM to compare their effectiveness, gpt-4o-mini and gpt-4o are GPT-4 variants, with the former being a lightweight version optimized for efficiency and the latter being the full-scale model with enhanced capabilities.

TABLE III: Comparison of MAPPO-BDP and LLM-BDP

Metric	MAPPO-BDP	gpt-4o-mini	gpt-4o
Parameters	35K	8B	1.8T
Training Time	22 h	0 h*	0 h*
Feature Selection Time	3.58 ms	13.67 s	25.88 s
Nav. Generation Time	1.35 ms	12.54 s	16.86 s

* 0 h indicates that no additional training is required by the user. The models have already been pre-trained extensively.

As illustrated in Table III, models in MAPPO-BDP, with significantly fewer parameters compared to gpt-4o and gpt-4o-mini, demonstrate faster inference speeds. However, the primary advantage of GPT models over MAPPO-BDP models lies in their remarkable flexibility. While MAPPO-BDP requires retraining to accommodate varying bandwidth constraints, GPT models can dynamically adapt through prompt modifications, thereby eliminating the need for retraining. Additionally, although gpt-4o has a slower inference speed than gpt-4o-mini, it delivers significantly greater reasoning capabilities, making it better suited for handling complex

tasks. It is worth noting that MAPPO-BDP was trained and tested on a single NVIDIA A100 GPU, whereas gpt-4o-mini and gpt-4o were accessed via OpenAI's API.

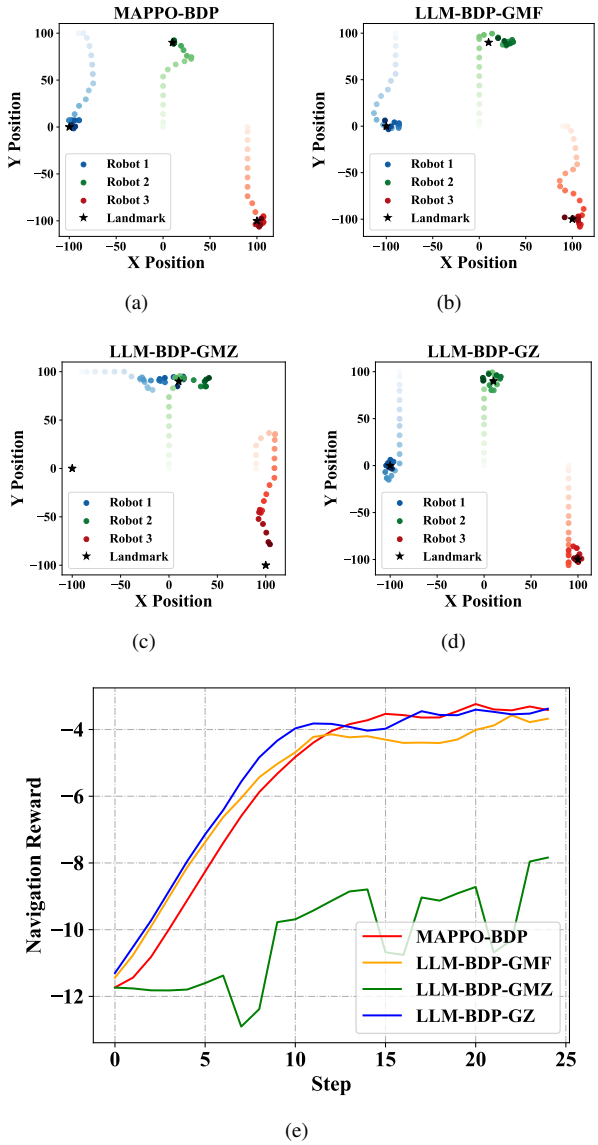

Fig. 7: (a) MAPPO-BDP Trajectory, (b) LLM-BDP-GMF Trajectory, (c) LLM-BDP-GMZ Trajectory, (d) LLM-BDP-GZ Trajectory, (e) Navigation Reward Comparison

Fig. 7 presents the results of robot trajectories and rewards in a single episode with bandwidth W_c = 1 kHz, comparing the performance of MAPPO-BDP and LLM-BDP with various LLM models. Fig. 7 (a) to Fig. 7 (d) depict the trajectories of three agents spreading to cover three landmarks using different algorithms: (a) MAPPO-BDP, (b) LLM-BDP with gpt-4o-mini using Few-Shot Learning (LLM-BDP-GMF), which involves providing a few example prompts to enhance the reasoning capabilities of LLMs, (c) LLM-BDP with gpt-4o-mini using Zero-Shot Learning (LLM-BDP-GMZ), which relies on the model's inherent ability to infer without examples, and (d) LLM-BDP with gpt-4o using Zero-Shot Learning (LLM-BDP-GZ). The trajectory colors transition from light to dark, indicating the progression from the initial position (step 0) to the latest position (step 25). Fig. 7 (e) compares the navigation rewards obtained at each step for these algorithms.

When comparing the successful task completion in Fig. 7 (a) and Fig. 7 (d), both approaches effectively achieve the goal of reaching the landmarks. However, the trajectory of MAPPO-BDP appears more indirect, while LLM-BDP-GZ demonstrates more direct paths. This difference can be attributed to the distinct learning mechanisms employed by each algorithm. Specifically, MAPPO-BDP relies on trial-and-error learning, which may result in suboptimal paths, whereas LLMs like gpt-4o leverage their pre-trained knowledge, enabling more direct and efficient navigation.

The comparison between Fig. 7 (b) and Fig. 7 (c) demonstrates the effectiveness of Few-Shot Learning in improving the performance of gpt-4o-mini. By incorporating example prompts, the reasoning capabilities of gpt-4o-mini are significantly improved, whereas with Zero-Shot learning, gpt-4o-mini fails to achieve the objective of covering the landmarks in a single episode. Furthermore, the comparison between Fig. 7 (c) and Fig. 7 (d) highlights the importance of the underlying LLM's capabilities. Even in a Zero-Shot Learning context, utilizing a more advanced LLM like gpt-4o achieves better results than gpt-4o-mini.

Fig. 7 (e) compares the navigation rewards of these algorithms over 25 steps. The navigation reward curves indicate that both LLM-BDP-GZ and MAPPO-BDP achieve higher rewards. LLM-BDP-GMF also performs well, with a reward curve close to that of MAPPO-BDP and LLM-BDP-GZ, highlighting the positive impact of Few-Shot Learning. In contrast, LLM-BDP-GMZ results in the lowest rewards, indicating that the model performs poorly on this task without the support of example prompts.

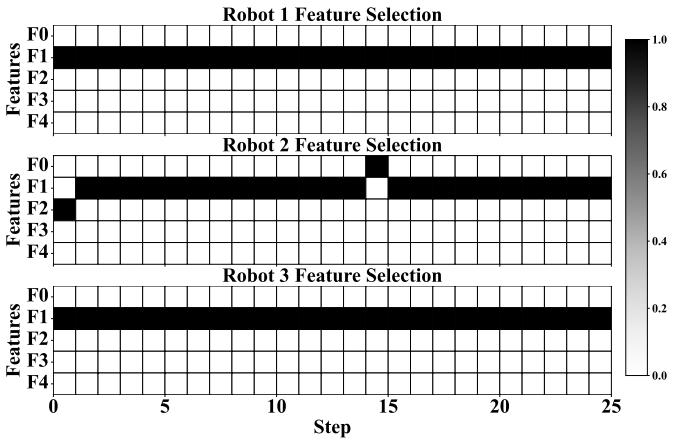

Fig. 8: Feature Selection of LLM-BDP-GMF.

Fig. 8 presents the feature selection of each robot during the communication phase within an episode, using LLM-BDP-GMF under the bandwidth constraint W_c = 1 kHz. This figure demonstrates that LLM-BDP-GMF can identify the importance of the position information (F1) for effective communication. All three robots consistently exhibit a higher likelihood of selecting F1 for transmission throughout the

episode. This indicates that LLM-BDP-GMF recognizes the critical role of sharing the robot's own position to enhance collaborative performance, as other robots do not inherently possess this information.

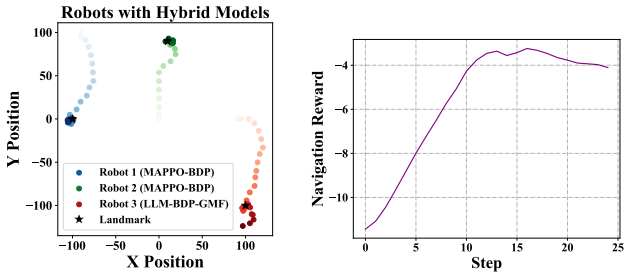

(a) (b)

Fig. 9: (a) Robots with Hybrid Models Trajectory, (b) Robots with Hybrid Models Navigation Reward

Fig. 9 presents the results of the robots with hybrid MAPPO-BDP and LLM-BDP-GMF models (HML) in a single episode with bandwidth W_c = 1 kHz. Robots 1 and 2 utilize models trained via MAPPO-BDP, while Robot 3 employs the model derived from LLM-BDP-GMF. Remarkably, due to our proposed human-interpretable feature communication protocol, Robot 3, despite not being co-trained with Robots 1 and 2, can still interpret their messages and effectively cooperate to accomplish the navigation task.

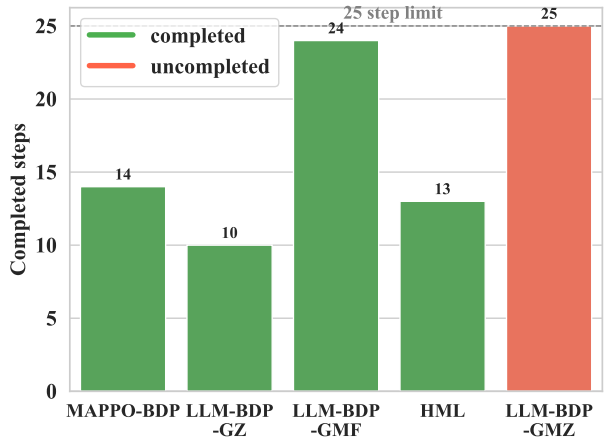

Fig. 10: Completed Steps.

Fig. 10 demonstrates the number of steps required to achieve the landmark coverage goal in the multi-robot navigation scenario across five different methods: (a) MAPPO-BDP, (b) LLM-BDP-GMF, (c) LLM-BDP-GMZ, (d) HML, and (e) LLM-BDP-GZ. The y-axis depicts the completed steps, where green bars indicate successful completion, whereas red bars represent failure to complete within the 25-step limit. Among these methods, LLM-BDP-GZ exhibits the most efficient performance, requiring only 10 steps, followed by MAPPO-BDP and HML, which need 14 and 13 steps respectively. Although LLM-BDP-GMF successfully completes the task, it requires significantly more steps. In contrast, LLM-BDP-GMZ fails to achieve the landmark coverage goal, reaching the maximum limit of 25 steps without completion.

VI. Conclusion

In this paper, we considered a multi-robot navigation scenario, and proposed a goal-oriented, human-interpretable feature communication protocol to enhance multi-robot cooperation. Building on this protocol, we introduced two frameworks: the MAPPO-based Bandwidth-Adaptive Dual-Policy (MAPPO-BDP) framework and the LLM-based Bandwidth-Adaptive Dual-Policy (LLM-BDP) framework. The MAPPO-BDP framework utilizes a constrianed MAPPO to learn feature communication policy, and a MAPPO to learn the navigation policy. In contrast, the LLM-BDP framework leverages pre-trained LLM-based multi-agents to select communication features and generate navigation action. Experimental results demonstrated that both frameworks successfully completed the navigation task within limited time steps, effectively selecting important features under bandwidth constraints. Moreover, robots trained with the MAPPO-BDP framework can seamlessly collaborate with robots from the LLM-BDP framework, benefiting from the interpretability of the proposed communication protocol.

References

[1] D. S. Drew, "Multi-agent systems for search and rescue applications," *Curr. Robot. Rep.*, vol. 2, pp. 189–200, Jun. 2021.

[2] C. Zhang, Y. Tian, Z. Zhang, W. Xue, X. Xie, T. Yang, X. Ge, and R. Chen, "Neighborhood Cooperative Multiagent Reinforcement Learning for Adaptive Traffic Signal Control in Epidemic Regions," *IEEE Trans. Intell. Transp. Syst.*, vol. 23, no. 12, pp. 25 157–25 168, Dec. 2022.

[3] A. Arora, A. Jain, D. Yadav, V. Hassija, V. Chamola, and B. Sikdar, "Next Generation of Multi-Agent Driven Smart City Applications and Research Paradigms," *IEEE Open J. Commun. Soc.*, vol. 4, pp. 2104–2121, Aug. 2023.

[4] Y. Su, H. Zhou, Y. Deng, and M. Dohler, "Energy-Efficient Cellular-Connected UAV Swarm Control Optimization," *IEEE Trans. Wirel. Commun.*, vol. 23, no. 5, p. 4127–4140, May. 2024.

[5] R. Kamdar, P. Paliwal, and Y. Kumar, "A state of art review on various aspects of multi-agent system," *J. Circuits Syst. Comput.*, vol. 27, no. 11, p. 1830006, Oct. 2018.

[6] L. Canese, G. C. Cardarilli, L. Di Nunzio, R. Fazzolari, D. Giardino, M. Re, and S. Spanò, "Multi-agent reinforcement learning: A review of challenges and applications," *Appl. Sci.*, vol. 11, no. 11, p. 4948, May 2021.

[7] Y. Chang, X. Wang, J. Wang, Y. Wu, L. Yang, K. Zhu, H. Chen, X. Yi, C. Wang, Y. Wang *et al.*, "A survey on evaluation of large language models," *ACM Trans. Intell. Syst. Technol.*, vol. 15, no. 3, pp. 1–45, Mar. 2024.

[8] C. Zhu, M. Dastani, and S. Wang, "A survey of multi-agent reinforcement learning with communication," *arXiv preprint arXiv:2203.08975*, Mar. 2022.

[9] R. Wang, X. He, R. Yu, W. Qiu, B. An, and Z. Rabinovich, "Learning Efficient Multi-agent Communication: An Information Bottleneck Approach," in *Proc. Int. Conf. Mach. Learn. (ICML)*, Vienna, Jul. 2020, pp. 9908–9918.

[10] H. Mao, Z. Zhang, Z. Xiao, Z. Gong, and Y. Ni, "Learning Agent Communication under Limited Bandwidth by Message Pruning," in *Proc. Assoc. Adv. Artif. Intell. (AAAI)*, New York, Feb. 2020, pp. 5142–5149.

[11] L. L. di Langosco, J. Koch, L. D. Sharkey, J. Pfau, and D. Krueger, "Goal Misgeneralization in Deep Reinforcement Learning," in *Proc. Int. Conf. Mach. Learn. (ICML)*, vol. 162, Jul. 2022, pp. 12 004–12 019.

[12] H. Zhou, C. Hu, Y. Yuan, Y. Cui, Y. Jin, C. Chen, H. Wu, D. Yuan, L. Jiang, D. Wu *et al.*, "Large language model (llm) for telecommunications: A comprehensive survey on principles, key techniques, and opportunities," *arXiv preprint arXiv:2405.10825*, Sep. 2024.

[13] T. Brown, B. Mann, N. Ryder, M. Subbiah, J. D. Kaplan, P. Dhariwal, A. Neelakantan, P. Shyam, G. Sastry, A. Askell *et al.*, "Language models are few-shot learners," in *Proc. Conf. Neural Inf. Process. Syst. (NIPS)*, vol. 33, Dec. 2020, pp. 1877–1901.

[14] J. Wei, X. Wang, D. Schuurmans, M. Bosma, F. Xia, E. Chi, Q. V. Le, D. Zhou *et al.*, "Chain-of-thought prompting elicits reasoning in large language models," in *Proc. Conf. Neural Inf. Process. Syst. (NIPS)*, vol. 35, Dec. 2022, pp. 24 824–24 837.

[15] I. Singh, V. Blukis, A. Mousavian, A. Goyal, D. Xu, J. Tremblay, D. Fox, J. Thomason, and A. Garg, "ProgPrompt: Generating Situated Robot Task Plans using Large Language Models," in *Proc. IEEE Int. Conf. Robot. Autom. (ICRA)*, May 2023, pp. 11 523–11 530.

[16] Y. Du, O. Watkins, Z. Wang, C. Colas, T. Darrell, P. Abbeel, A. Gupta, and J. Andreas, "Guiding Pretraining in Reinforcement Learning with Large Language Models," in *Proc. Int. Conf. Mach. Learn. (ICML)*, vol. 202, Jul. 2023, pp. 8657–8677.

[17] Z. Mandi, S. Jain, and S. Song, "Roco: Dialectic multi-robot collaboration with large language models," *arXiv preprint arXiv:2307.04738*, Jul. 2023.

[18] F. Jiang, Y. Peng, L. Dong, K. Wang, K. Yang, C. Pan, and X. You, "Large AI model empowered multimodal semantic communications," *arXiv preprint arXiv:2309.01249*, Aug. 2023.

[19] H. Zhou, Y. Deng, X. Liu, N. Pappas, and A. Nallanathan, "Goal-Oriented Semantic Communications for 6G Networks," *arXiv preprint arXiv:2210.09372*, Apr. 2024.

[20] E. C. Strinati, P. Di Lorenzo, V. Sciancalepore, A. Aijaz, M. Kountouris, D. Gündüz, P. Popovski, M. Sana, P. A. Stavrou, B. Soret *et al.*, "Goal-Oriented and Semantic Communication in 6G AI-Native Networks: The 6G-GOALS Approach," *arXiv preprint arXiv:2402.07573*, Feb. 2024.

[21] Y. Yan and Y. Mostofi, " Co-Optimization of Communication and Motion Planning of a Robotic Operation under Resource Constraints and in Fading Environments ," *IEEE Trans. Wirel. Commun. (TWC)*, vol. 12, no. 4, p. 1562–1572, Apr. 2013.

[22] X. Lyu, S. Aditya, J. Kim, and B. Clerckx, " Rate-Splitting Multiple Access: The First Prototype and Experimental Validation of Its Superiority Over SDMA and NOMA ," *IEEE Trans. Wirel. Commun. (TWC)*, vol. 23, no. 8, p. 9986–10000, Aug. 2024.

[23] H. Meshgi, D. Zhao, and R. Zheng, "Optimal Resource Allocation in Multicast Device-to-Device Communications Underlaying LTE Networks," *IEEE Trans. Veh. Technol.*, vol. 66, no. 9, pp. 8357–8371, Sep. 2017.

[24] R. Lowe, Y. I. Wu, A. Tamar, J. Harb, O. Pieter Abbeel, and I. Mordatch, "Multi-agent actor-critic for mixed cooperative-competitive environments," in *Proc. Conf. Neural Inf. Process. Syst. (NIPS)*, Dec. 2017, pp. 6379–6390.

[25] J. Schulman, F. Wolski, P. Dhariwal, A. Radford, and O. Klimov, "Proximal policy optimization algorithms," *arXiv preprint arXiv:1707.06347*, Aug. 2017.

[26] C. Yu, A. Velu, E. Vinitsky, J. Gao, Y. Wang, A. M. Bayen, and Y. Wu, "The Surprising Effectiveness of PPO in Cooperative Multi-Agent Games," in *Proc. Conf. Neural Inf. Process. Syst. (NIPS)*, Dec. 2022, pp. 24 611–24 624.

[27] C. Tessler, D. J. Mankowitz, and S. Mannor, "Reward Constrained Policy Optimization," in *Proc. Int. Conf. Learn. Represent. (ICLR)*, Apr. 2019, pp. 1–15.

[28] J. Schulman, P. Moritz, S. Levine, M. I. Jordan, and P. Abbeel, "High-Dimensional Continuous Control Using Generalized Advantage Estimation," in *Proc. Int. Conf. Learn. Represent. (ICLR)*, Apr. 2016, pp. 1–14.

[29] Z. Xi, W. Chen, X. Guo, W. He, Y. Ding, B. Hong, M. Zhang, J. Wang, S. Jin, E. Zhou *et al.*, "The rise and potential of large language model based agents: A survey," *arXiv preprint arXiv:2309.07864*, Sep. 2023.

[30] G. OpenAI, "Gpt-4V(ision) system card," *preprint*, 2023.

[31] S. Shahriar, B. D. Lund, N. R. Mannuru, M. A. Arshad, K. Hayawi, R. V. K. Bevara, A. Mannuru, and L. Batool, " Putting GPT-4o to the Sword: A Comprehensive Evaluation of Language, Vision, Speech, and Multimodal Proficiency ," *Appl. Sci.*, vol. 14, no. 17, p. 7782, Sep. 2024.